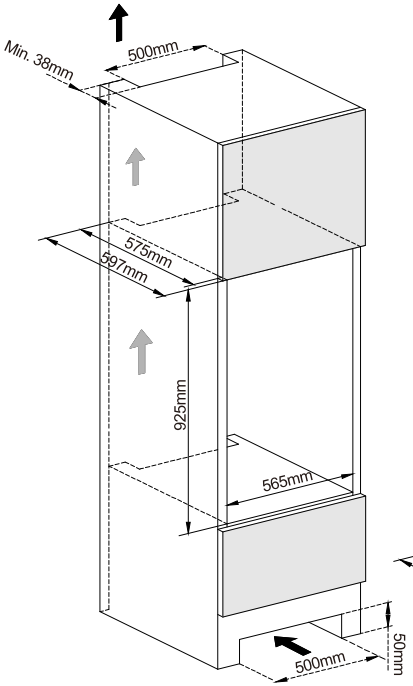

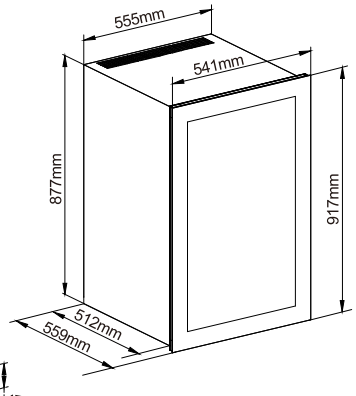

Front View

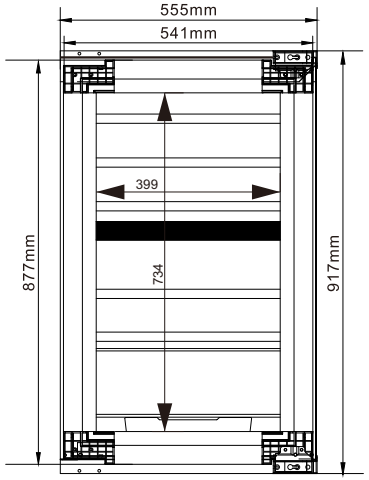

Side View

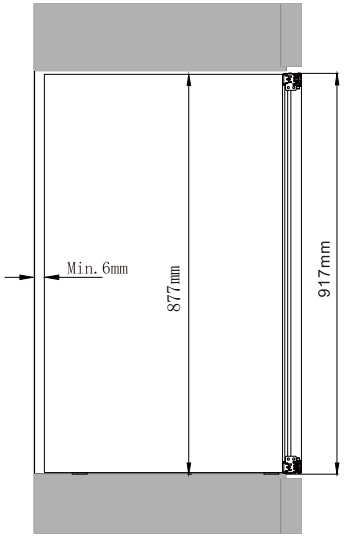
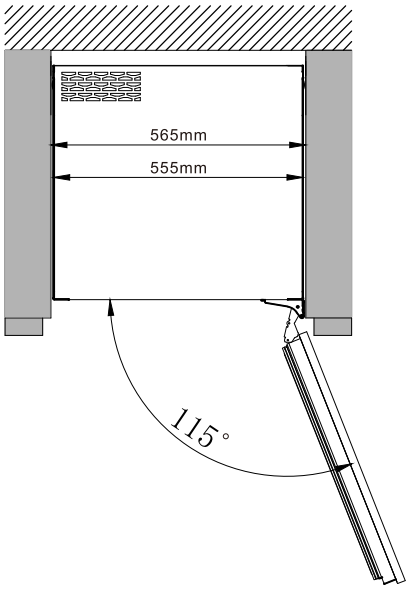
Top View